Hydraulic Performance Curves

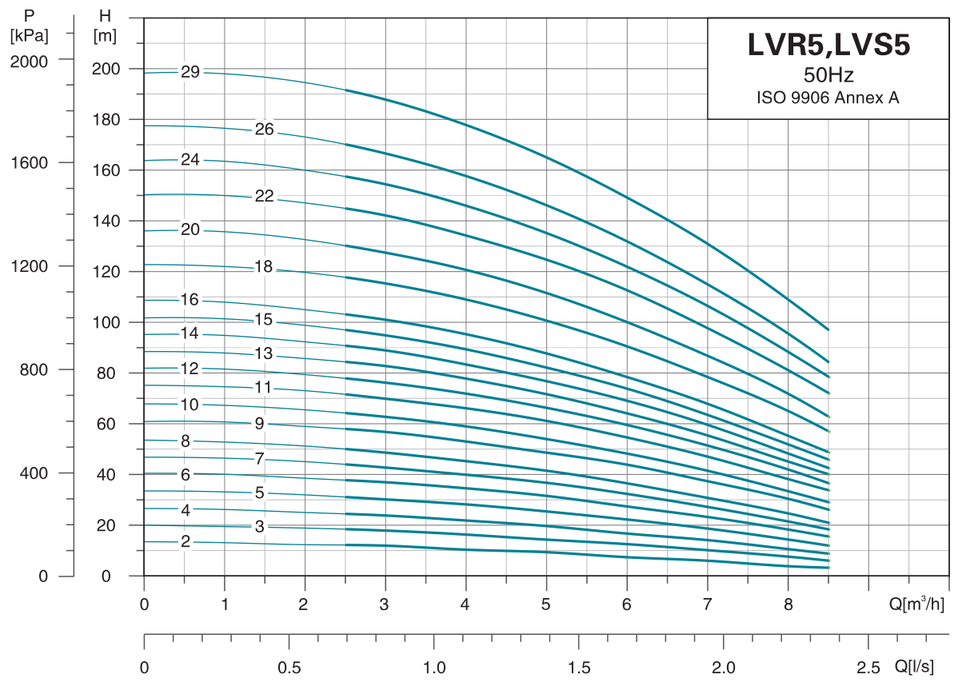

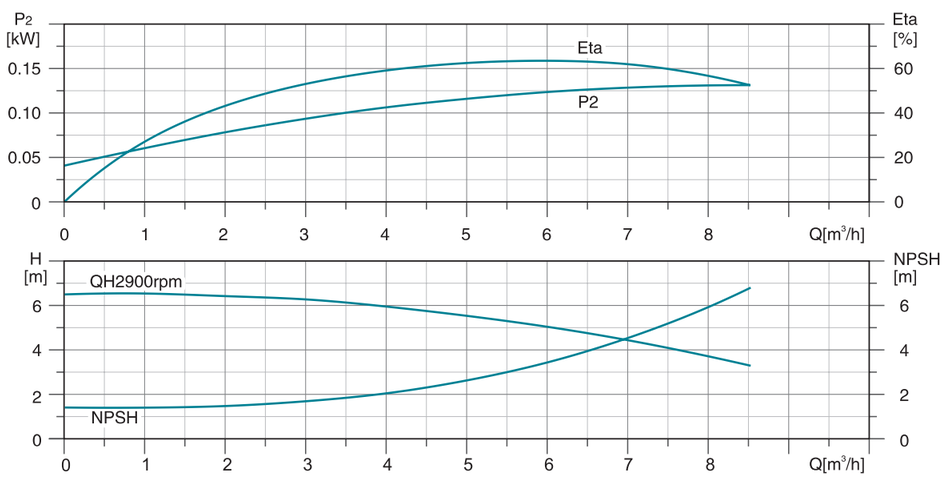

Dimension Drawing

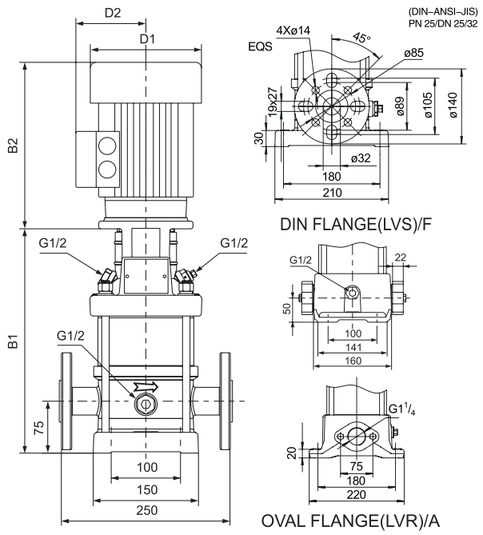

MODEL	OVAL FLANGE(LVR)		DIN FLANGE(LVS)		D1	D2
	B1	B1+B2	B1	B1+B2		
5–2	256	486	282	512	136	109
5–3	283	513	309	539	136	109
5–4	310	540	336	566	136	109
5–5	341	591	367	617	155	124
5–6	368	618	394	644	155	124
5–7	395	645	421	671	155	124
5–8	422	672	448	698	155	124
5–9	465	775	491	801	175	137
5–10	492	802	518	828	175	137
5–11	519	829	545	855	175	137
5–12	546	856	572	882	175	137
5–13	573	883	599	909	175	137
5–14	600	910	626	936	175	137
5–15	627	937	653	963	175	137
5–16	654	964	680	990	175	137
5–18	712	1042	738	1068	195	151
5–20	766	1096	792	1122	195	151
5–22	820	1177	846	1203	219	169
5–24	874	1231	900	1257	219	169
5–26	928	1285	954	1311	219	169
5–29	1009	1366	1035	1392	219	169

Note: B1 and B1+B2 of clamp connector and threaded connector are in compliance with that of DIN flange.

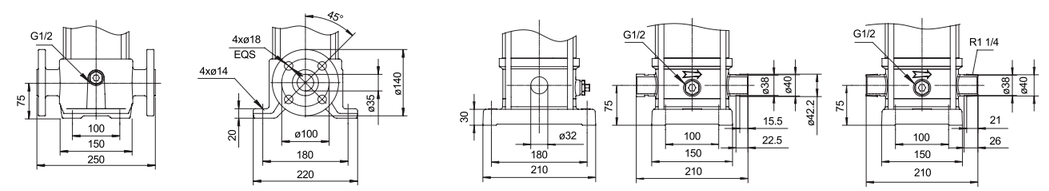

MODEL	POWER[kW]	Q[m³/h]	1.0	2.0	3.0	4.0	5.0	6.0	7.0
5–2	0.37		13	12	12	10	9	7	6
5–3	0.55		19	19	18	16	15	12	10
5–4	0.55		26	25	24	22	19	16	14
5–5	0.75		33	32	30	28	24	22	18
5–6	1.1		40	38	37	34	28	27	23
5–7	1.1		46	45	42	40	32	32	27
5–8	1.1		53	51	48	45	40	36	31
5–9	1.5		60	59	56	53	47	44	37
5–10	1.5		67	65	62	59	53	48	41
5–11	2.2		74	73	70	66	59	54	47
5–12	2.2	H(m)	81	79	76	72	63	59	51
5–13	2.2		88	85	82	78	68	64	55
5–14	2.2		95	92	89	83	74	69	60
5–15	2.2		101	99	95	89	79	74	63
5–16	2.2		108	105	101	95	85	78	68
5–18	3.0		122	119	115	109	98	90	78
5–20	3.0		135	132	127	120	108	100	87
5–22	4.0		150	147	142	134	120	112	97
5–24	4.0		163	160	154	146	132	122	106
5–26	4.0		176	173	166	157	145	132	115
5–29	4.0		198	194	188	178	155	149	131